International Journal of Enhanced Research in Science Technology & Engineering, ISSN: 2319-7463
Vol. 2 Issue 11, November-2013, pp: (199-203), Available online at: www.erpublications.com

S-band S-matrix performance evaluations of low noise amplifier for IEEE 802.11 b/g for recent process technologies

Arun Sharma
Assistant Professor University Institute of Engineering & Technology,
Kurukshetra University, Kurukshetra, Haryana, India

Abstract: Low noise amplifier when simulated for system level configuration, the scattering matrix in general and scattering parameters in specific play vital role in performance of low noise amplifier for various frequency bands. In this paper the scattering parameter performance was analysed for S-band for recent process technologies available for CMOS and BiCMOS for IEEE 802.11 b/g.

Keywords: Low noise amplifier (LNA), Scattering parameters, S-matrix, S-band, WLAN, noise, gain, topology, process technology.

I. INTRODUCTION

The wireless market is developing very fast in this world. An increasing number of users and the need for higher data rates have led to an increasing number of various wireless communication standards like IEEE 802.11 WLAN. As present day market are highly sensitive to price, the result turns out in shape of demand for flexible and low-cost radio architectures for portable applications is increasing. The very first stage of a receiver is a low-noise amplifier (LNA), whose main function is to provide enough gain to overcome the noise. Aside from providing this gain while adding as little noise as possible, an LNA should accommodate large signals without distortion and frequently must also present specific impedance, such as 50 ohms to the input source [1]. The power gain, noise Fig. for a receiver is dominated by the power gain, noise Fig. provided by LNA. The LNA is a non-linear characteristic device causes two main problems one is blocking and other is inter-modulation [2]. Low noise amplifier is use to reduce the external as well as internal noise. Thus, a low noise amplifier (LNA) is an amplifier which amplifies the signal with low noise addition, that is, a LNA doesn't amplify the noise signal however the signal of interest is amplified with the LNA gain.

II. SCATTERING MATRIX AND SCATTERING PARAMETERS

For radio waves Voltage and current are difficult to measure directly. It is also difficult to implement open & short circuit loads at high frequency. Matched load is a unique, repeatable termination, and is insensitive to length, making measurement easier. Incident and reflected waves are thus the key measures and therefore engineers characterize the device under test using S parameters [3].

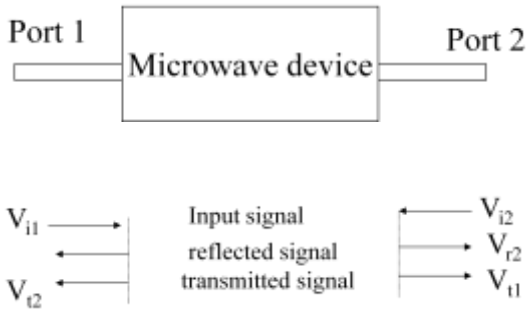

Fig. 1: Behavior of radio waves in two port network.

The matrix equations for a 2-port are

$$b_1 = S_{11}a_1 + S_{12}a_2 \qquad (1)$$

where

$$b_2 = S_{21}a_1 + S_{22}a_2$$

$$S_{ij} = \frac{b_j}{a_i} = \frac{\text{power measured at port j}}{\text{power measured at port i}} \qquad (2)$$

in matrix form:

$$\begin{bmatrix} b_1 \\ b_2 \end{bmatrix} = \begin{bmatrix} S_{11} & S_{12} \\ S_{21} & S_{22} \end{bmatrix} \begin{bmatrix} a_1 \\ a_2 \end{bmatrix} \qquad (3)$$

$$a_n = V_n^+ \Big/ \sqrt{Z_{0n}} \qquad b_n = V_n^- \Big/ \sqrt{Z_{0n}} \qquad (4)$$

,

$$S_{ij} = \frac{b_i}{a_j}\bigg|_{a_{k=0,k\neq j}} = \frac{V_i^- \Big/ \sqrt{Z_{0i}}}{V_j^+ \Big/ \sqrt{Z_{0j}}}\bigg|_{V^+_{k=0,k\neq j}} \qquad (5)$$

Where, a_i represents the square root of the power wave injected into port i and bi represents the square root of the power wave injected into port j. For multiport radio frequency in general and microwave frequencies in specific, the scattering parameters are:

$$\begin{aligned} b_1 &= S_{11}a_1 + S_{12}a_2 + \cdots + S_{1n}a_n \\ b_2 &= S_{21}a_1 + S_{22}a_2 + \cdots + S_{2n}a_n \\ &\vdots \\ b_n &= S_{n1}a_1 + S_{n2}a_2 + \cdots + S_{nn}a_n \end{aligned} \qquad (6)$$

in matrix form

$$\begin{bmatrix} b_1 \\ b_2 \\ \vdots \\ b_n \end{bmatrix} = \begin{bmatrix} S_{11} & S_{12} & \cdots & S_{1N} \\ S_{21} & & & \vdots \\ \vdots & & & \\ S_{n1} & \cdots & & S_{nn} \end{bmatrix} \begin{bmatrix} a_1 \\ a_2 \\ \vdots \\ a_n \end{bmatrix} \qquad (7)$$

or

$$[b] = [S][a] \qquad (8)$$

where S_{ij}

$S_{11} = \frac{b_1}{a_1}\Big|_{a2=0}$ S_{11} – input reflection coefficient with the output matched

$S_{21} = \frac{b_2}{a_1}\Big|_{a2=0}$ S_{21} – forward transmission gain or loss (9)

$S_{12} = \frac{b_1}{a_2}\Big|_{a1=0}$ S_{12} – reverse transmission or isolation

$S_{22} = \frac{b_2}{a_2}\Big|_{a1=0}$ S_{22} – output reflection coefficient with the input matched

For low noise amplifier, the stability can be deciphered from K. If K > 1, the response of low noise amplifier is stable otherwise the stability is conditional [4].

$$K = \frac{1 - |S_{22}|^2 - |S_{11}|^2 + |\Delta_S|^2}{2|S_{12}S_{21}|} > 1 \qquad (10)$$

where

$$\Delta_S = S_{11}S_{22} - S_{12}S_{21} \qquad (11)$$

$$\left| |\Delta_S|^2 - L \right| + L > 1 \qquad (12)$$

$$L = |S_{12}S_{21}| + \frac{|S_{11}|^2 + |S_{22}|^2}{2} \qquad (13)$$

A. Wireless Local Area Networks

While mobile phone data transfer is designated for global communications with large coverage range, higher performance can be obtained in local environments equipped with WLANs (Wireless Local Area Networks). In addition to data communication via base stations, WLAN devices can also operate peer-to-peer [5]. WLAN systems with very short coverage below about 10 m are segmented into WPANs (Wireless Personal Area Networks) or WBANs (Wireless Body Area Networks). Among the most important WLANs are the 802.11 standards [6].

Table I. Summary of WLAN 802.11 (b/g) Standards [7, 8].

	IEEE Standard 802.11(b)	IEEE Standard 802.11(g)
Release	Sep-1999	June-2003
Frequency	2.4 GHz	2.4 GHz
Max. data Rate	11 Mbps	54 Mbps
Modulation	DSSS	DSSS, OFDM
Indoor Range	35 meter	38 meter
Output range	140 meter	140meter

III. CHOICE OF TECHNOLOGY

The choice of technology points towards the transistors to be emplyoed in design of LNA which may include any one of the following as: CMOS, BiCMOS, MESFET, HEMT, Bipolar transistors, HBT [10]. The (Process Design Kits) PDKs available by different vendors with process technology as GLOBALFOUNDRIES, IBM Semiconductor Solutions, united monolithic semiconductors, Global Communication Semiconductors (GCS), Taiwan Semiconductor Manufacturing Company (TSMC), TSMC 28nm, TSMC 40nm, TSMC 45nm, TSMC 55nm, TSMC 65nm, TSMC 90nm, TSMC 0.13µm, TSMC 0.18µm [11]. The choice of technology dectates the biaing voltage and biasing current for the design of LNA.

IV. LNA OPERATING FREQUENCY

The foremost is the determination of the frequency spectrum for which the design of LNA is sought.

Table II. Microwave frequency allocations according to IEEE

Band	L	S	C	X	Ku
Frequency range	.8-2 GHz	2-4 GHz	4-8 GHz	8-12 GHz	12-18 GHz
Band	K	Ka	V	W	S band used for present work.
Frequency range	18-27 GHz	27-40 GHz	40-75 GHz	75-110 GHz	

.

The L, S and C bands have been intensively used for mobile and wireless communications and are the area of interest for this paper. Radio frequency (RF) range- 3 KHz to 300 GHz. Microwave is the subset of the RF range [9]. RF covers 3 Hz to 300 Hz while microwave occupies the higher frequency at 300MHz to 300 GHz.

V. PERFORMANCE EVALUATIONS FOR S-MATRIX FOR RECENT PROCESS TECHNOLOGY

The recent process technologies revolve around 0.13µm, 0.18µm 0.35µm CMOS and SiGe BiCMOS for which a comprehesive study is tabularised. The three most vital coefficients for s-matrix are input reflection coefficent with output matched, forward transmission gain and output reflection with input matched are analyzed for three different process technologies. Focusing input reflection coefficent with output matched (S_{11}) being most crucial for relaible working for LNA states that S_{11} for 0.13 µm, 0.18 µm and 0.35 µm CMOS revolves around -8 dB to -17 dB which is fairly good enough for practicle applications, however the results obtaibed by for K. Onsato 2004 [16] for 0.35 µm CMOS for S_{11} are commendable. Focusing forward transmission gain (S_{21}) being the
second most crucial scattering parameters reveals that S_{21} for 0.13 µm, 0.18 µm and 0.35 µm CMOS revolves with the average of 16 dB which is fairly good enough for practicle applications but more relaible results need to be obtained for future technological advances, however the results obtaibed by for Joseph C. Bardinand, 2009 [13] for 0.13 µm CMOS for S_{21} are commendable.

Table III: Performance evaluations for s-matrix for recent process technology

	Technology	S_{11} (dB)	S_{21} (dB)	S_{22} (dB)
Hanil Lee, 2006 [12]	0.13 µm CMOS	-15	9.1	-22
Joseph C. Bardinand, 2009 [13]	0.13 µm CMOS	-8.4	28.3	-16.3
Bagher Afshar, 2006 [14]	0.18 µm CMOS	-15	12.0	-27
Hyung jin Lee, 2005 [15]	0.18 µm CMOS	-10	14.0	-10
K. Onsato 2004 [16]	0.35 µm CMOS	-17	10.8	-11
A. Ismail, 2004 [17]	SiGe BiCMOS	-9	21.0	-9

Output reflection with input matched (S_{22}) is the parameters which determines the intergrated circuit configuration for the building blocks succeding LNA in receiver frontend and thus making output reflection with input matched as the vital parameter to be focused. Focusing output reflection coefficent with input matched (S_{22}) being most crucial for relaible working for LNA states that (S_{22}) for 0.13 µm, 0.18 µm and 0.35 µm CMOS revolves around -10 dB to -25 dB which is fairly good enough for practicle applications, however the results obtaibed by for Bagher Afshar, 2006 [14] for 0.18 µm CMOS are commendable.

VI. CONCLUSION

The present work provides a sightful guide for various facets involving s-matrix for s-band design of a low noise amplifier for IEEE 802.11b/g standards for the latest process technology are 0.13 µm, 0.18 µm and 0.35 µm CMOS and SiGe BiCMOS are discussed with commendable review for the best results achieved in each category for the low noise amplifier design.

REFERENCES

[1]. Thomas H. Lee, "The Design of CMOS Radio-Frequency Integrated Circuits" 2nd Edition, Cambridge University Press, 2004, ISBN 0-521-61389-2.
[2]. Inder J. BAHL, "Fundamentals of RF and Microwave Transistor Amplifiers" first Edition, WILEY, 2009, ISBN 978-0-470-39166-2.
[3]. Microwave Engineering, David Pozer, Third Edition, Wiley 2005.
[4]. "S Parameter Design," Hewlett-Packard Application Note 154, April 1972.
[5]. Jun Zhao, Zihua Guo and Wenwu, "Power efficiency in IEEE 802.11a WLAN with cross-layer adaption," IEEE International Conf. On Communications, ICC 2003, May 2003, vol. 3, pp.2030-2034.
[6]. Josep Soler-Garrido, Daisuke Takeda and Yoshimasa Egashira, "Experiment evaluation of an IEEE 802.11n wireless LAN system employing lattice reduction aided MIMO detection," IEEE Global Telecommunications Conference, GLOBECOM 2010, Dec.2010, pp.1-5.
[7]. P. Rossi, A. Liscidini, M. Brandolini, and F. Svelto, "A variable gain rf front-end, based on a voltage-voltage feedback LNA, for multistandard applications," IEEE J. Solid-State Circuits, vol. 40, no. 3, pp. 690–697, Mar. 2005.
[8]. A. Scholten, L. Tiemeijer, R. van Langevelde, R. Havens, A. Van Duijnhoven, R. de kort and D. Klaassen, " Compact modelling of noise for RF CMOS circuit design," IEEE proceeding-Circuits, Devices and Systems, April 2004vol. 151,pp. 167-174.
[9]. Massimo Brandolini, Paolo Rossi, Danilo Manstretta and Francesco Svelto, "Toward Multi-standard Mobile Terminals-Fully Integrated Receivers Requirements and Architectures,"IEEE Transactions on Microwave Theory and Techniques, March 2005, vol. 53, pp. 1026-1038.
[10]. Y.S.Wang, L.-H. Lu, "5.7 GHz Low-Power Variable Gain LNA in 0.18μm CMOS," IEEE Electronics Letters, Jan. 2005, vol. 41, pp. 66-68.
[11]. Seon-SikMyoung, Sang-Hoon Cheon, Jong-GwanYook, "Low-Noise and High Linearity LNA based on InGap/GaAS HBT for 5.3 GHz WLAN," IEEE Gallium Arsenide and Other Semiconductor Application Symposium EGAAS 2005, Oct. 2005, pp. 89-92.
[12]. Hanil Lee and Saeed Mohammadi, "A 3 GHz subthreshold CMOS low noise amplifier," IEEE Radio Frequency Integrated Circuits (RFIC) Symposium, june 2006, pp. 1-4.
[13]. Joseph C. Bardinand and Sander Weinreb, "A 0.1 GHz to 5 GHz cryogenic SiGe MMIC LNA," IEEE Microwave and Wireless Components Letters, June 2009, vol. 19, no. 6, pp. 407-409.
[14]. Bagher Afshar and Ali M. Niknejad, X/Ku band CMOS LNA design techniques," IEEE Custom Integrated Circuits Conference, CICC 06 , September 2006, pp. 389- 392.
[15]. Hyung Jin Lee, Dong Sam Ha, and Sang S. Choi, "A systematic approach to CMOS low noise amplifier design for ultra wideband applications," IEEE Internatinal Symp. on Circuit and System, May 2005,vol. 4, pp. 3962-3965.
[16]. K. Ohsato, T. Yoshimasu, "Internally matched, ultra-low DC power consumption CMOS amplifier for L-Band personal communications," IEEE Microwave Wireless Letters,May 2004, vol. 14, pp. 204-206.
[17]. A. Ismail and A. Abidi, "A 3 to 10GHz LNA using a wide-band LC-ladder matching network," IEEE International Conf. on Solid State Circuits, Feb.2004, vol. 1, pp.384-386.